Appendix J.4
Preliminary Design Report

Hermitage Golf Club

Retaining Wall

Hermitage Golf Club Retaining Wall Preliminary Design Report

Lucan to City Centre Core Bus Corridor
BCIDA-ACM-STR_ZZ-0006_XX_00-RP-CB-0015

Client – National Transport Authority
Stage – Stage 2

Project Reference: BusConnects Package A
Project Number: 60599123
BCIDA–ACM-STR_ZZ–0006_XX_00–RP–CB–0015

Date (21st April 2022)

Preliminary Design Report – Consultation

STA-1b

Categories 1, 2 & 3

Scheme

Name and Location BusConnects – CBC0006 Lucan to City Centre Core Bus Corridor

Structures(s)

Name and nature of the Structure(s) CBC0006-RW01 Hermitage Golf Club Retaining Wall

Structures Options Report

Reference BCIDA–ACM-STR_ZZ–0006_XX_00–RP–CB–0015

Revision L01

Date 17 / 05 / 2022

Submitted by

Signed Niamh Rodgers

Name Niamh Rodgers

Position Regional Director (Team Leader)

Organisation AECOM

Date 17 / 05 / 2022

Transport Infrastructure Ireland confirmation of consultation:

Signed: - Fergal Cahill

Name: - Fergal Cahill

Position: - Senior Engineer - TII Structures

Date: - 20-09-2022

Table of Contents

1. Introduction 7
1.1 Brief 7
1.2 Background Information 7
1.3 Previous Studies and their recommendations 7
2. Site and Location 9
2.1 Introduction 9
2.2 Function of the structure and obstacles crossed 9
2.3 Choice of location 9
2.4 Site description topography 9
2.5 Vertical and horizontal alignment 10
2.6 Cross sectional dimensions on the alignments 10
2.7 Existing underground and overground services 10
2.8 Geotechnical summary 11
2.8.1 Hermitage Golf Club Retaining Wall Ground Summary 11
2.9 Hydrology and hydraulic summary 11
2.10 Archaeological summary 11
2.11 Environmental summary 12
3. Structure & Aesthetics 13
3.1 General description of recommended structure or family of structures and design working life 13
3.2 Aesthetic considerations 14
3.3 Proposals for the recommended structure or family of structures 14
3.3.1 Proposed Category 14
3.3.2 Span Arrangements 14
3.3.3 Minimum headroom provided 14
3.3.4 Approaches including run-on arrangements 14
3.3.5 Foundation type 14
3.3.6 Substructure 14
3.3.7 Superstructure 14
3.3.8 Articulation arrangements, joints, and bearings 15
3.3.9 Vehicle Restraint System 15
3.3.10 Drainage 15
3.3.11 Durability 15
3.3.12 Sustainability 15
3.3.13 Inspection and maintenance 15
4. Safety 16
4.1 Traffic management during construction including land for temporary diversions 16
4.2 Safety during construction 16
4.3 Safety in use 16
4.4 Lighting 17
5. Cost 18
5.1 Budget Estimate in current year 18
6. Design Assessment Criteria 19
6.1 Actions 19
6.1.1 Permanent Actions 19
6.1.2 Snow, Wind and Thermal Actions 19
6.1.3 Actions relating to normal traffic 19
6.1.4 Actions relating to abnormal traffic 19
6.1.5 Footway or footbridge live loading 19

6.1.6 Provision for exceptional abnormal loads 19
6.1.7 Accidental actions 19
6.1.8 Actions during construction 19
6.1.9 Any special loading not covered above 20
6.2 Authorities consulted and any special conditions required 20
6.3 Proposed departures from standards 20
6.4 Proposed methods of dealing with aspects not covered by standards 20
7. Ground Conditions 21
7.1 Geotechnical Classification 21
7.2 Description of the ground conditions and compatibility with proposed foundation design 21
7.2.1 Hermitage Golf Club Retaining Wall 21
8. Drawings and Documents 22
8.1 List of all documents accompanying the submissions 22
Appendix A Photographs and Photomontages 23
Appendix B Drawings 24
Appendix C Utility Drawings 25
Appendix D Designers Risk Assessment 26

Figures

Figure 2-1 Location Plan 9
Figure 2-2 Hermitage Golf Club Retaining Wall Borehole Locations 11
Figure 8-1 RW01 Hermitage Golf Club Retaining Wall 23

Tables

Table 1-1 Previous Studies 7
Table 2-1 N4 Cross Section 10
Table 2-2 List of Service Providers 10
Table 2-4 Hermitage Golf Club Retaining Wall Ground Summary 11
Table 3-1 RW01 Hermitage Golf Club Retaining Wall Geometry 13
Table 3-2 Minimum Design Life for Structural Elements 14
Table 3-3 Required Finishes 14
Table 5-1 RW01 Hermitage Golf Club Retaining Wall Budget Estimate for the current year 18
Table 6-1 Materials Densities for Design 19
Table 8-1 Drawing List 22

1. Introduction

1.1 Brief

The BusConnects Dublin – Core Bus Corridor (CBC) Infrastructure Works (herein after called the CBC Infrastructure Works) involves the development of continuous bus priority infrastructure and improved pedestrian and cycling facilities on twelve radial core corridors in the Greater Dublin Area.

The National Transport Authority (NTA) have appointed AECOM in a joint venture with Mott MacDonald to undertake the design of the infrastructure works for Package A of the BusConnects Programme. Package A includes the following three CBC schemes:

Clongriffin to City Centre Core Bus Corridor Scheme;

Lucan to City Centre Core Bus Corridor Scheme; and

Tallaght/Clondalkin to City Centre Core Bus Corridor Scheme.

Each scheme contains several bridge structures and retaining walls with various structural forms. As part of the scope AECOM have agreed to take all structures through the *Technical Acceptance of Road Structures on Motorways and Other National Roads* procedure as outlined in DN-STR-03001.

This Preliminary Design Report (PDR) will focus on the retaining wall structure located along the N4 National Road at Junction 3 Lucan. The PDR is a deliverable at Phase 4 of the Technical Acceptance process.

The Preliminary Design Report refers to the following retaining wall:

RW01 Hermitage Golf Club Retaining Wall

This retaining wall is required due to proposed changes to the existing road alignment creating additional cross-sectional width along the N4 to meet the project objectives of CBC Infrastructure Works.

1.2 Background Information

BusConnects plans to transform Dublin's bus and cycle network, with an aim of increasing the attractiveness of public transport and cycling encouraging a modal shift from private car. The scheme consists of twelve radial Core Bus Corridor's (CBC), which will be supplemented at a later stage with a network of orbital corridors. The scheme will provide 230kms of continuous bus priority lanes and 200kms of cycle tracks/lanes throughout Dublin. The Lucan to City Centre CBC has been identified as one of the twelve routes proposed along the Core Bus Network.

The proposed retaining wall will be located along the eastbound carriageway of the N4 and will replace an existing masonry retaining wall separating the N4 from the Hermitage Golf Club. The retaining wall is required to provide additional cross sectional width along the N4 to create sufficient space for a new two-way cycle track.

1.3 Previous Studies and their recommendations

The following table is a list of documents as part of previous studies for the development:

Date	Document Reference	Report Title	Author
April 2022	BCIDA-ACM-STR_ZZ-0006_XX_00-RP-CB-00014	CBC0006 Hermitage Golf Club Retaining Wall Options Report	AECOM
2020	RPT-16_080-004 (DRAFT)	Lucan to City Centre Core Bus Corridor Options Study – Feasibility Report	AECOM
2020	BCIDA-ACM-PMG_PD-0006_XX_00-RP-ZZ-0001 (DRAFT)	CBC06 Preferred Route Options Report	AECOM

Table 1-1 Previous Studies

The Structures Options Report (SOR) dated May 2022 assessed three different options for the retaining wall. The report assessed each option based on a Multi Criteria Assessment (MCA) and recommended that the retaining wall should be formed by an embedded retaining structure.

2. Site and Location

2.1 Introduction

The retaining wall is located along the N4 at the Hermitage Golf Club. The ITM co-ordinates of the retaining wall are as follows: 705,645.123(N), 735,495.739(E)

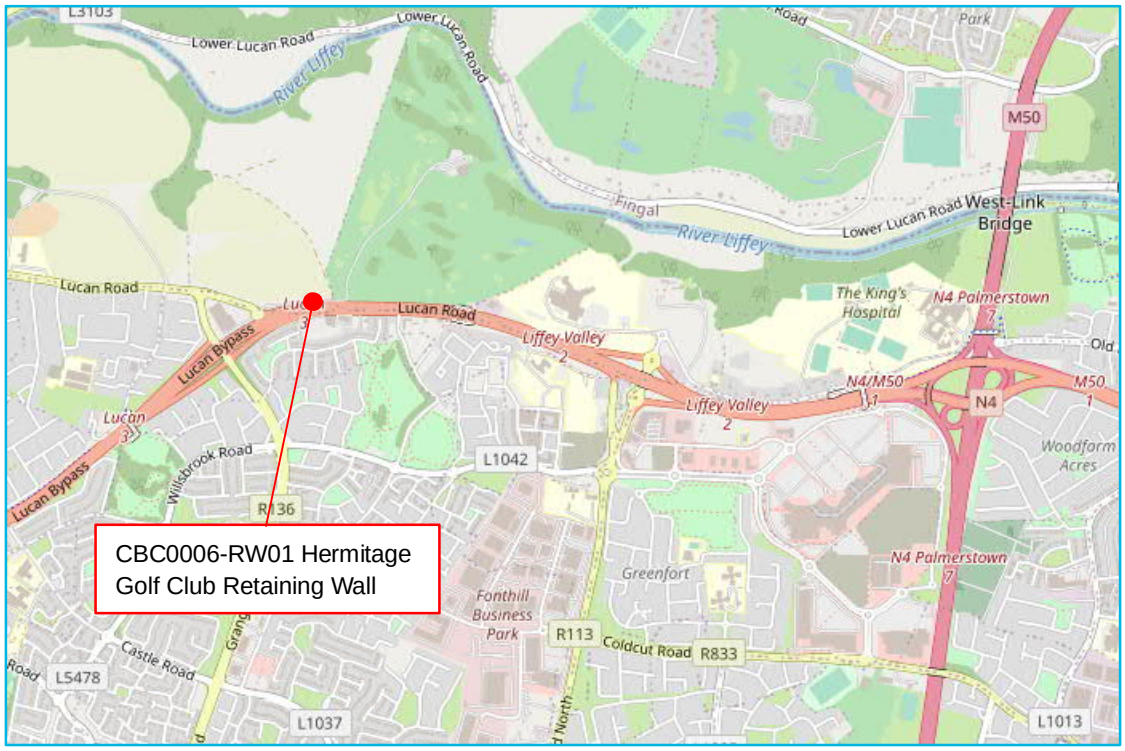

©OpenStreetMap contributors

Figure 2-1 Location Plan

2.2 Function of the structure and obstacles crossed

The retaining wall is required to provide additional cross sectional width along the N4 to create sufficient space for a new two-way cycle track. The structural form will need to consider the available workspace from the N4 and minimise the disruption within the Hermitage Golf Club lands.

2.3 Choice of location

The proposed retaining wall will be located along the eastbound carriageway of the N4 and will replace an existing masonry retaining wall separating the N4 and the Hermitage Golf Club. The retaining wall will form the new boundary line between this existing infrastructure and will be required to tie in with the remaining section of the existing boundary wall.

2.4 Site description topography

This retaining wall is located in a well-developed area with a number of busy roads, commercial, amenity and healthcare units and other infrastructure. Maintaining the existing natural environment in the immediate areas should be priority for construction. Minimisation of tree removal is of critical importance particularly within the Hermitage Golf Club. The existing trees create a natural screen for privacy from the N4 and prevent stray golf balls exiting the vicinity. During the previous rounds of public consultation numerous comments have been received highlighting the importance of protecting the existing mature trees and planting along the route. The structural form of the wall has been determined to minimise tree loss. In addition, construction of the wall will need to consider the effects on the root network of trees to avoid further loss of trees outside of the area to be retained. As part of construction a significant number of new trees will be replanted on the golf club's side of the new boundary wall to

reinstate the visual boundary. In the interim it is proposed to construct a golf course sports netting to the rear of the wall within the Hermitage Golf Club lands.

2.5 Vertical and horizontal alignment

The vertical alignment at the proposed wall will maintain the existing alignment of the N4 carriageways. At the wall location the N4 has a longitudinal fall from east to west of 2.7%. The existing cross section will also be maintained with a north to south fall from a high point at the existing masonry retaining wall.

2.6 Cross sectional dimensions on the alignments

The N4 Cross Section at Hermitage Golf Club Retaining Wall is as follows:

Section	Width (m)
Two-Way Cycle Lane	3.50
Footpath	2.00
Eastbound Bus Lane	4.00
Eastbound Traffic Lane	10.00
Central Reserve	2.00
Westbound Traffic Lane	16.00
Footpath	2.20
Westbound Cycle Lane	3.50
Total	**43.20**

Table 2-1 N4 Cross Section

2.7 Existing underground and overground services

A number of existing services have been recorded in the area surrounding the proposed retaining wall. The following table summarises the service providers and their utilities.

Retaining Wall	Service Provider	Services	Location
Hermitage Golf Club Retaining Wall	Irish Water	Existing Water Network	Along Hermitage Golf Club Entrance Road and Along Eastbound N4
		Existing Foul Water Drainage	Along Intersection of N4 and R835 Roundabout
		Existing Strom Water Drainage	Edge of Eastbound N4
	EIR	Existing EIR Network	Along Intersection of N4 and R835 Roundabout and Along Eastbound N4
	ESB	Existing LV Electricity (Overhead)	Along Intersection of N4 and R835 Roundabout and Across N4
	GNI	Existing MP Gas Network	Along Intersection of N4 and R835 Roundabout

Table 2-2 List of Service Providers

Rerouting and diversion of any of the existing underground and overground services to facilitate construction of each structure will be carried out as required as part of the overall BusConnects scheme.

2.8 Geotechnical summary

2.8.1 Hermitage Golf Club Retaining Wall Ground Summary

Multiple light percussion boreholes were completed along the N4 as part of the CBC0006 Lucan to City Centre Ground Investigation. R6-WS01 and R6-WS02 were located along the extent of the Hermitage Golf Club Retaining Wall. The figure below shows the approximate locations of the boreholes.

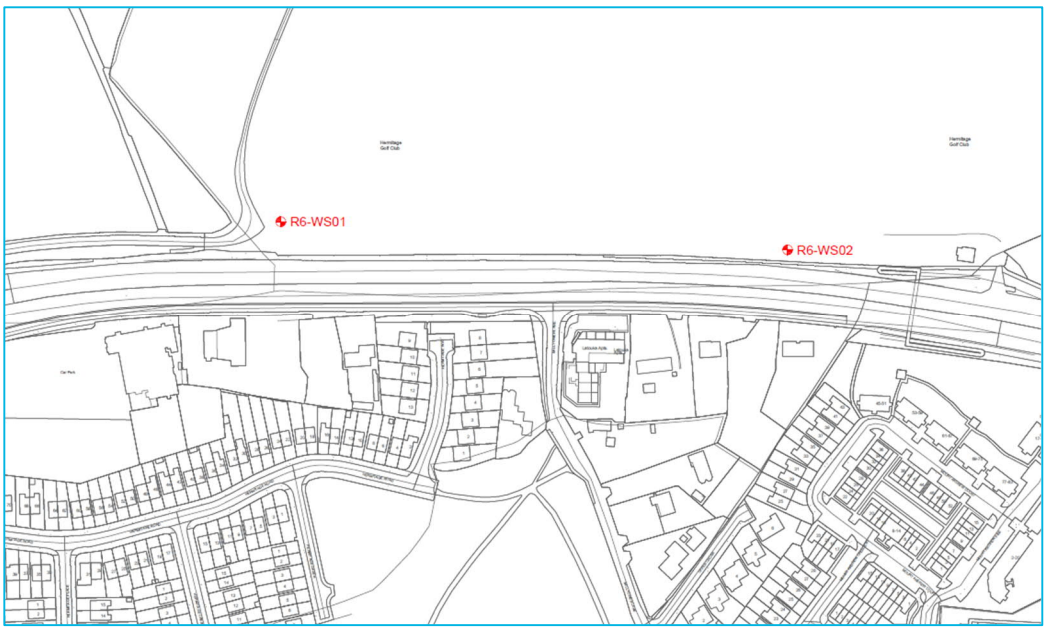

Figure 2-2 Hermitage Golf Club Retaining Wall Borehole Locations

R6-WS01 recorded TOPSOIL of 0.4m depth followed by very dense brown sandy silty fine to coarse GRAVEL, where the sand is coarse. At 1.4m depth the borehole was terminated where an SPT blow count of 50 was recorded.

R6-WS02 recorded TOPSOIL of 0.3m depth followed by very dense brown very sandy very silty fine to coarse Gravel where the sand is fine to coarse. At 0.87m depth the borehole was terminated where an SPT blow count of 50 was recorded.

Stratum	Typical Stratum Description	Depth at Top of Stratum (m bgl)	Level at Top of Stratum (m AOD)	Thickness Range (m)	Occurrence
Topsoil	Topsoil	0	64.42 – 53.45	0.3 – 0.4	R6WS01, R6WS02
Gravel	Very sandy, fine to course Gravel	0.3 – 0.4	64.12 – 53.05	0.57 – 1.0	R6WS01, R6WS02

Table 2-3 Hermitage Golf Club Retaining Wall Ground Summary

2.9 Hydrology and hydraulic summary

The River Liffey forms the main hydraulic feature in the surrounding area. The River Liffey is located approximately 500m to the north of the retaining wall location with no other major waterways or distributary stream in the immediate surrounding area.

A review of the OPW flood mapping (www.floodinfo.ie) shows that there are no historical events pertaining to flooding in the area surrounding the retaining wall as of 21st April 2022. A review of CFRAMS model output for fluvial flooding for the present day shows that the retaining wall is located outside of the River Liffey's flood zone for the 0.1% Annual Exceedance Probability (AEP).It is unlikely that construction of the wall will impact this flood zone, however review of the flood mapping in the area should be revisited in the detailed design stage to review any possible updates of the flood record.

2.10 Archaeological summary

No sites of major archaeological importance were identified at the proposed retaining wall locations.

2.11 Environmental summary

The EIAR prepared as part of the preliminary design did not identify any particular major environmental impacts associated with the construction of the retaining wall. The main findings of the EIAR relating to the retaining wall is as follows:

Removal of trees, which make a positive contribution to the environment will be required for the construction of this retaining wall, however it is noted that the retaining wall structural form has been determined to minimise removal of mature vegetation. There is the potential for construction activities, to result in adverse noise impacts at properties in the Fonthill area including the Hermitage Golf Club. This will need to be mitigated as part of the design.

3. Structure & Aesthetics

3.1 General description of recommended structure or family of structures and design working life

The Hermitage Golf Club Retaining Wall proposes the use of an embedded retaining wall solution. The embedded retaining wall will take the form of either a contiguous or secant pile wall. The choice between the two wall types will be determined at detailed design stage and will be dependent on the retained height to be accommodated, the ground conditions and the available construction period. Embedded retaining walls are formed of a series of adjacent piles constructed to form an earth retaining cantilever structure.

Contiguous piled walls consist of a row of successive unconnected cast-insitu concrete piles constructed with small gaps between the adjacent pile and are normally formed using CFA or rotary bored piles. These types of walls can be used for more flexible geometry where curvature is required and are suitable for ground conditions where there is no requirement to exclude ground water.

Secant piled walls are formed by constructing alternating primary (male) and secondary (female) piles in succession. The piles are spaced to ensure that the secondary piles partially cut into either side of the primary piles in order to form a continuous impervious structure. Generally, the primary piles are unreinforced “soft” piles while the secondary piles are reinforced “hard” piles.

The proposed retaining wall dimensions are as follows:

Parameter	Dimension
Retained Length	306.4m
Max Retained Height	4.3m
Min Retained Height	1.5m
Boundary Wall Height	2.0m

Table 3-1 RW01 Hermitage Golf Club Retaining Wall Geometry

Piled walls are generally suitable for larger retained heights and can be designed to 5m without the need for ground anchorages. Typically, where the retained heights are in excess of 5m, ground anchors will be utilised to increase horizontal capacity of the wall. A reinforced concrete capping beam shall also be provided to the top of the wall connecting each of successive piles together ensuring continuity and improving stability of the entire retaining wall.

The piled wall will be designed needs to ensure that stability is provided by the forces taken within the piles. The applied overturning moment will be resisted by a couple of forces on the piles, one in tension and one in compression. The resultant sliding force will be resisted by the lateral capacity of the vertical piles. As the retained height increases additional lateral forces may exceed the pile capacity. In this case inclined ground anchors will be included within the design to take the lateral force. These anchors will help to reduce the lateral loads and the overturning moments within the pile.

Ground anchors will likely be required as part of the retaining wall construction due to the surcharge loading associated with the proposals to construct a golf course sports netting to the rear of the wall within the Hermitage Golf Club lands to reduce the risk of stray golf balls. It is expected that this sports netting will be removed in future once newly planted trees are established.

The design working life of the retaining wall will be a minimum of 120 years as defined in the TII publication, DN-STR-03012 - Design for Durability. Maintainable elements and components listed below are subject to greater wear and will require replacement within the design life. Careful design and detailing combined with thorough routine inspections, quality control and supervision on site will help achieve the minimum expected design life listed in the below table:

Component	Years
Expansion Joints	50
Drainage Systems	50

Table 3-2 Minimum Design Life for Structural Elements

3.2 Aesthetic considerations

The retaining wall design incorporates the basic principles of structures aesthetics which respects the surrounding landscape and minimises the environmental intrusion. The wall will be detailed and finished to match the surroundings effectively blending with the existing environment. The proposed finishes will be critical to ensuring the environmental intrusion of the walls is limited. A thick masonry cladding is considered the most suitable finish to match the existing retaining/boundary walls on site.

The table below indicates the required finish for the wall:

Retaining Wall	Finish Required
RW01 Hermitage Golf Club Retaining Wall	Masonry Cladding

Table 3-3 Required Finishes

3.3 Proposals for the recommended structure or family of structures

3.3.1 Proposed Category

The Hermitage Golf Club Retaining Wall will be classified as Category 1 (retaining structures >1.5m and <5m) and thus requires a check by another Engineer within the same Design Team.

3.3.2 Span Arrangements

The retaining wall will be required to retain the existing and proposed embankment for a length of 306.4m.

3.3.3 Minimum headroom provided

Not applicable – unrestricted headroom will be provided on the retaining wall.

3.3.4 Approaches including run-on arrangements

The retaining wall will be required to tie into the existing masonry boundary/retaining walls on site.

3.3.5 Foundation type

The embedded retaining wall is formed with piled foundations. A reinforced concrete capping beam shall be provided to the top of the wall connecting each of successive piles together ensuring continuity and improving stability of the entire retaining wall.

3.3.6 Substructure

Not applicable.

3.3.7 Superstructure

The height of the wall varies depending on the required retaining height. The maximum height of the wall (including the boundary wall) will be 6.3m and a minimum of 3.5m. The total wall thickness shall be 1.125m which includes a 0.225m thick masonry cladding finish.

3.3.8 Articulation arrangements, joints, and bearings

Expansion joints shall be located along the length of the retaining wall at maximum spacing of 10m. Where expansion joints are provided, they shall be detailed in accordance with Series 2300 of the Specification. All joints shall be filled with a suitable closed cell polyethylene filler material, the thickness of filler shall be dependent on the expected thermal movement. The joints shall also be sealed with a two-part polysulphide sealant to prevent water leakage through the joint from the retained soil.

3.3.9 Vehicle Restraint System

No vehicle restraint system is required to the retained side at the top of the wall as there is no risk of vehicles accessing this area. A boundary wall shall be provided to the top of the wall to prevent falls from height from the retained side.

3.3.10 Drainage

A 225mm wide permeable drainage layer coupled with a perforated drainage pipe shall be provided to the rear of the wall to prevent the build-up of pore water pressure to the back of the wall. The drainage shall be a positive drainage system in accordance with DN-STR-03012. Future access for rodding and maintenance of the drainage system shall also be provided.

3.3.11 Durability

The retaining wall will be designed in accordance with the TII publication DN-STR-03012 - Design for Durability with a minimum design life of 120 years. The design life for replaceable parts such as expansion joints and drainage systems will be 50 years in accordance with DN-STR-03012. The design working life of the retaining wall will be working life category 5 while replaceable parts will be working life category 2 in accordance with GE-POL-01008.

All buried concrete surfaces will be treated with two coats of epoxy resin waterproofing in accordance with DN-STR-03012 – Design for Durability and CC-SPW-02000 Specification for Road Works Series 2000 – Waterproofing for Concrete Structures.

All exposed concrete surfaces will receive a hydrophobic pore lining impregnation in accordance with DN-STR-03012 – Design for Durability and CC-SPW-02000 Specification for Road Works Series 2000 – Waterproofing for Concrete Structures.

3.3.12 Sustainability

The use of Ground Granulated Blast Slag (GGBS) will be maximised to reduce the cement usage and reduce the environmental impact of the concrete production. These replacement levels will be in accordance with the levels specified within IS EN 206:2013.

At the end of the service life a large proportion of the concrete of the wall can be recycled and reused as aggregate material or hard core for road construction.

3.3.13 Inspection and maintenance

Maintenance and inspection of the retaining wall will be required throughout the service life. The inspections will be carried out in line with the TII EIRSPAN Bridge Management System. The EIRSPAN system was introduced in 2001 to provide an integrated management system for the bridges and structures in Ireland. The system coordinates activities such as inspection, repairs and maintenance work to ensure optimal management of the bridge stock. As a minimum the following inspection regime should be implemented:

- Routine Inspection – every year;
- Principal Inspection - every six years.

Routine inspections will be carried out from the finished ground level, however for principal inspections and possibly maintenance may require an appropriate method of working from height such as an MEWP. These inspections should check for deterioration in the wall, or any movements of the wall out of plane since the previous inspection.

Maintenance of back wall drainage systems will be critical during the service life of the wall to avoid any build-up of water pressure in the retained soil, which if untreated could lead to failure of the wall.

4. Safety

4.1 Traffic management during construction including land for temporary diversions

The Hermitage Golf Club Retaining Wall will be constructed parallel to the highly congested road. The construction sequence will need to minimise the affect construction will have on the live carriageways. Where lane closures are required during construction suitable traffic management in accordance with Chapter 8 of the Traffic Signs Manual will need to be installed.

4.2 Safety during construction

As part of the design development, a Designer's Risk Assessment (DRA) has been prepared in accordance with the Safety, Health and Welfare at Work (Construction) Regulations 2013 and the amendments of 2019,2020 and 2021. The DRA shall be viewed as a working document to be developed further as the design develops. The DRA includes all risks identified and the resulting mitigation measures or alterations incorporated within the design, where no mitigation is possible the DRA will be used to communicate the risks to the Contractor and site personnel.

Where possible, the hierarchy of risk control will be implemented within the design and construction, with the Designer and Contractor aiming to control all risks through elimination. Where this is not possible, reduction, isolation or mitigation controls will be incorporated to ensure safety during construction.

The following list of particular risks has been identified for the retaining wall:

- Traffic around Dublin can be very busy, particularly for the N4 which experiences heavy congestion. It is important that it is clearly communicated how workers will access the site, in order to avoid any possible conflicts with traffic.
- It is important to ensure that the entrance lane to the Hermitage Golf Club remains open at all times during construction and closures should be avoided.
- Any temporary slopes required as part of construction should be constructed with suitable benching to minimise the risk of earth falls.
- Considerations should be made regarding cyclists and pedestrians during construction with possible alternate routes clearly communicated to ensure that safety is maintained.
- The risk of working near live services should be considered. A health and safety plan should be prepared to determine the correct procedure in the event of contact with live services.

4.3 Safety in use

Safety of the end user will be considered as part of the Designer's Risk Assessment. An Engineer Routine Inspection will be carried out at least once a year or after any significant event in line with the recommendations contained within the EIRSPAN Bridge Management System, as defined by TII. The routine inspection will take account of any defects and establish whether the retaining wall requires a Principal Inspection to be carried out or if routine maintenance consisting of simple remedial works is sufficient to maintain the safety. A Principal Inspection can only be carried out by an approved Principal Inspection Team Leader according to the TII Bridge Management Section. The Principal Inspection shall record all findings on the EIRSPAN database for future reference.

A boundary wall has been included to the top of the wall to prevent falls from height from the retained side. This boundary wall has a height of 2m and shall be detailed with copping units which prevent climbing.

A significant number of new trees will be replanted on the golf club's side of the new boundary wall to provide a barrier from stray golf balls posing a risk to vehicles on the N4. In the interim while the trees mature it is proposed to construct a golf course sports netting to the rear of the wall within the Hermitage Golf Club lands to reduce the risk of stray golf balls.

4.4 Lighting

No public lighting is proposed as part of the retaining wall design.

5. Cost

5.1 Budget Estimate in current year

The construction costs provided below have been based on quantities calculated from the preliminary retaining wall design. Major elements associated with retaining wall such as earthworks, concrete and reinforcement have been included. Rates have been based on AECOM's internal cost database or based on Spon's Civil Engineering and Highway Works Price Book 2022 as required. It should be noted that costs are indicative only and may vary depending on the detailed design and the Contractor's methodology.

Allowances have been made for preliminaries, consultancy fees and contingency. A budget of 10% of the construction cost has been provided for preliminaries to cover traffic management, PSCS, temporary accommodation etc. The contingency is 15% of the construction cost and will cover minor elements such as drainage, fencing, landscaping works and any unforeseen unknowns. Finally, an allowance of 10% of the construction cost has been provided for professional fees to deliver the retaining wall through detailed design and handover. These fees will include detailed design, CAT I checks, construction supervision and handover.

The rates used to calculate the amounts presented below are all exclusive of VAT. No allowance has been made for land acquisition within the costs provided below. The cost of land acquisition will be covered under the construction costs for the entire BusConnects Lucan to City Centre route

Series	Amount (€)
CC-SPW-00600 – Earthworks	€22,030.00
CC-SPW-01700 – Structural Concrete	€284,268.00
CC-SPW-02000 – Waterproofing	€249,850.00
Construction Cost	**€556,148.00**
Preliminaries (10% of Construction Cost)	€55,614.80
Contingency (15% of Construction Cost)	€83,422.20
Professional Fees (10% of Construction Cost)	€55,614.80
Total Cost	**€750,799.80**

Table 5-1 RW01 Hermitage Golf Club Retaining Wall Budget Estimate for the current year

6. Design Assessment Criteria

6.1 Actions

6.1.1 Permanent Actions

Permanent actions and material densities will be applied in accordance with IS EN 1991-1-1 and the Irish National Annex. Material/partial factors will be detailed in IS EN 1990 and the Irish National Annex. The accepted densities for principal construction materials are as follows:

Material	Density
Reinforced Concrete	25 kN/m^3
Backfill to structures	21 kN/m^3

Table 6-1 Materials Densities for Design

6.1.2 Snow, Wind and Thermal Actions

Snow loads are not deemed a critical load case and will not be considered in accordance with the National Annex to IS EN 1991-1-3.

Wind loading will be considered in accordance with IS EN 1991-1-4 and the Irish National Annex. Wind loads will be taken to act simultaneously with other loads in accordance with the NA to IS EN 1990. Wind loads will not be considered in combination with thermal loading in accordance with clause A2.2.2 (6) of the NA to IS EN 1990.

Thermal loading will be considered in accordance with IS EN 1991-1-5 and the Irish National Annex. The combination of thermal and wind loading will not be considered in accordance with the National Annex to IS EN 1990.

6.1.3 Actions relating to normal traffic

Not applicable – traffic loading is excluded from the retained side.

6.1.4 Actions relating to abnormal traffic

Not applicable – traffic loading is excluded from the retained side.

6.1.5 Footway or footbridge live loading

Surcharge actions on the retaining wall due to LM4 footway loading will be considered in accordance with IS EN 1991-2 and the Irish National Annex.

6.1.6 Provision for exceptional abnormal loads

Not applicable.

6.1.7 Accidental actions

Not applicable - accidental traffic loading is excluded from the retained side

6.1.8 Actions during construction

Actions arising during construction will be considered in accordance with IS EN 1991-1-6 and the Irish National Annex.

6.1.9 Any special loading not covered above

The wall will be designed to account for surcharge loading from a proposed golf course sports netting to be provided to the rear of the wall within the Hermitage Golf Club lands. The wall shall resist the lateral pressures due to the vertical dead load of the netting and include for all live loading on the netting i.e. wind loading.

6.2 Authorities consulted and any special conditions required

The following authorities have been consulted as part of the development of the scheme:

- South Dublin County Council
- National Transport Authority

6.3 Proposed departures from standards

No departures from standards are envisaged for the design and construction of the retaining wall.

6.4 Proposed methods of dealing with aspects not covered by standards

Not applicable.

7. Ground Conditions

7.1 Geotechnical Classification

Applying the guidance in IS EN 1997-1, it is considered that Geotechnical Category 2 is currently the most appropriate category for the proposed retaining wall.

Geotechnical Category 2 applies to conventional types of structures and foundations with no exceptional risk or difficult loading conditions. This includes spread footing, raft foundations, piled foundations, walls or other structures retaining or supporting water, excavations, bridge piers and abutments, embankments and earthworks, ground anchors and other systems and tunnels in hard, non-fractured rock and not subjected to special water tightness or other requirements.

7.2 Description of the ground conditions and compatibility with proposed foundation design

7.2.1 Hermitage Golf Club Retaining Wall

An embedded retaining wall has been selected due to the following:

- Due to the limited ground investigation carried out at this stage of project development an embedded retaining wall has the ability to be installed in all likely ground conditions expected. Based on the ground investigation to date the following ground conditions are anticipated:
  - Made Ground,
  - Glacial Till,
  - Gravels,
  - Bedrock.
- Water proofing of the retained area is possible through the use of a secant pile wall in the case where perched ground water is encountered;
- An embedded retaining wall will be capable of deal with granular layers encountered in the investigation that may not be self-supporting;
- An embedded retaining wall will result in a substantially reduced excavation footprint (when compared to other wall types) minimising the impact on trees within Hermitage Golf Course.

The choice of pile will either be rotary, or CFA likely dictated by any requirement for the piles to be socketed into bedrock.

In the absence of any specific client criteria, maximum wall displacements should normally be limited to 0.5% of the excavated height. In some locations where the retained height is greater, ground anchors may be required to reduce the wall deflections to more tolerable amounts relative to a cantilever embedded retaining wall. This should be reviewed at the detailed design stage. If ground anchors cannot be installed, then a larger diameter pile and stiffer wall may be required to limit deflections to tolerable amounts. Secant piles with a reinforced female pile could also be utilised to further reduce deflections; however, this will greatly affect construction installation rates due to the increased level of accuracy required.

Conservative characteristic parameters for likely ground conditions shall be derived at the detailed design stage.

The detailed design of embedded retaining walls should be designed in accordance with the guidance of CIRIA C760 Guidance on Embedded Retaining Wall Design. If the piles are required to support vertical loads the contribution to axial capacity should come from below the point required to satisfy limit equilibrium for ULS overturning. A conservative view on the beneficial properties of wall friction should be selected and possibly ignored if the piles are required to support vertical loads.

Further ground Investigation shall be required to inform detailed wall/pile design. Geophysics profiles in conjunction with boreholes may allow a wide area to be investigated and provide information on the depth to bedrock. The depth to bedrock will be a key driver of the choice of contiguous/secant piles and the required drill rig capacity and production rates.

8. Drawings and Documents

8.1 List of all documents accompanying the submissions

The following table lists the drawings accompanying this submission. The drawings are contained within Appendix B:

Drawing Number	Revision	Drawing Title
BCIDA-ACM-STR_GA-0006_RW_01-DR-CB-0101	L01	RW01.06 Hermitage Golf Club

Table 8-1 Drawing List

Appendix A Photographs and Photomontages

Figure 8-1 RW01 Hermitage Golf Club Retaining Wall

Appendix B Drawings

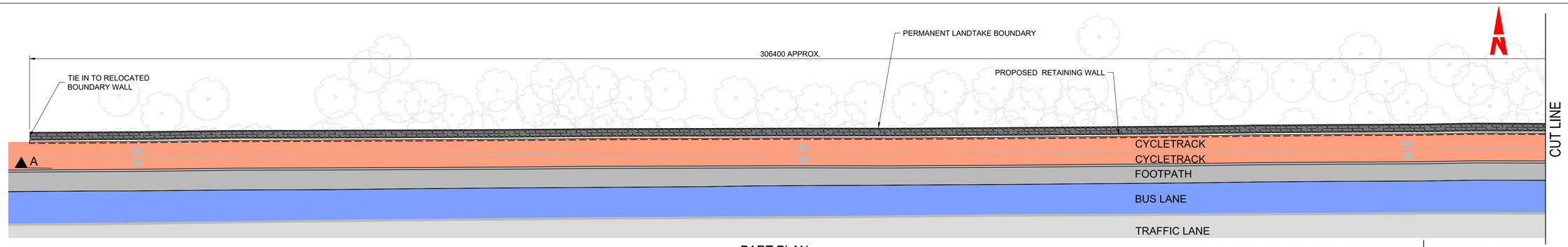

PART PLAN
1:250 @ A1
1:500 @ A3

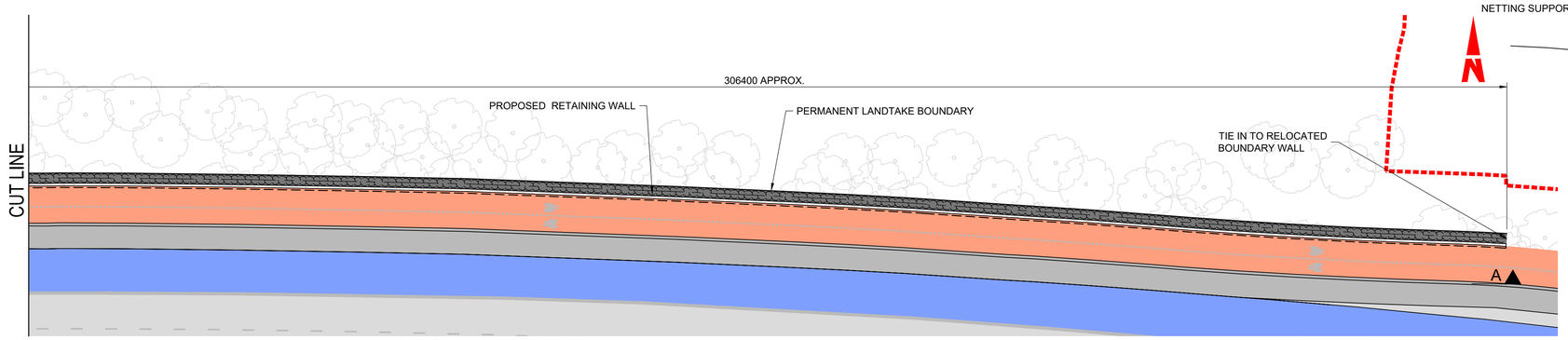

PART PLAN CONTINUED
1:250 @ A1
1:500 @ A3

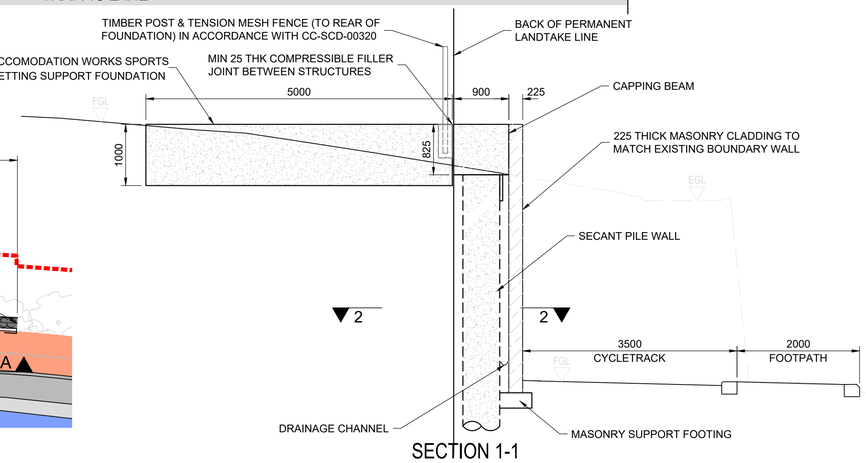

SECTION 1-1
1:50 @ A1
1:100 @ A1

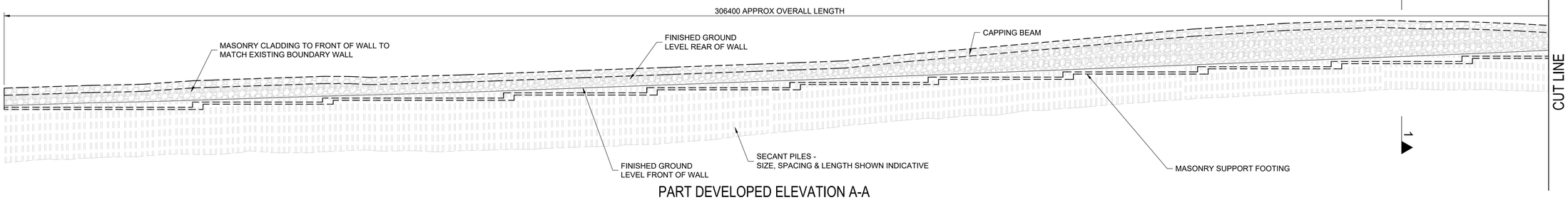

PART DEVELOPED ELEVATION A-A
1:250 @ A1
1:500 @ A3

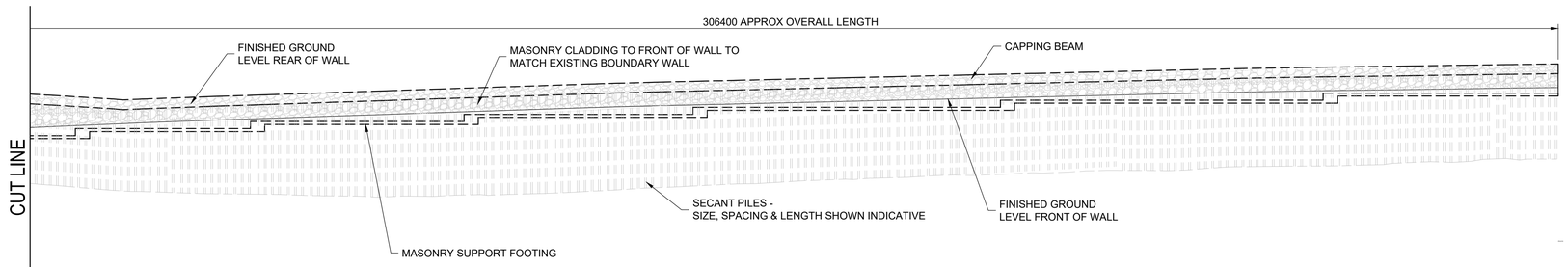

PART DEVELOPED ELEVATION A-A
1:250 @ A1
1:500 @ A3

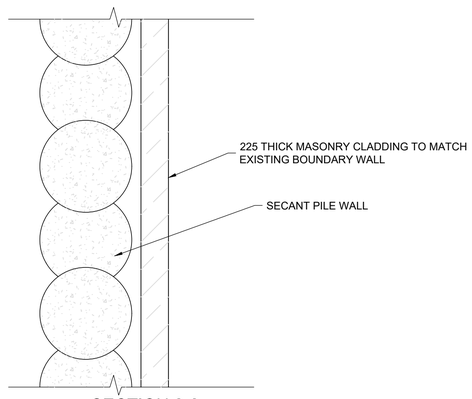

SECTION 2-2
1:25 @ A1
1:50 @ A1

Disclaimer

a. © National Transport Authority (NTA) 2022. This drawing is confidential and the copyright in it is owned by NTA. This drawing must not be either loaned, copied or otherwise reproduced in whole or in part or used for any purpose without the prior permission of NTA.

b. This drawing is to be used for the design element identified in the titlebox. Other information shown is to be considered indicative only. The drawing is to be read in conjunction with all other relevant design drawings.

c. O.S. data used for plans are printed under © Ordnance Survey Ireland Government of Ireland. All rights reserved. Licence Number 2022/OSi_NMA_180 National Transport Authority. All elevations are in metres and relate to OSi Geoid Model (OSGM15) Malin Head. All Co-ordinates are in Irish Transverse Mercator Grid (ITM) as defined by OSi active local GPS station.

d. Information concerning the position of apparatus shown on this drawing is based on drawings supplied by the utility owners and/or the utility works contractor, whilst every care has been taken in the preparation of this drawing, positions should be taken as approximate and are intended for general guidance only and no representation is made by the NTA as to the accuracy, completeness, sufficiency or otherwise of this drawing and the position of the apparatus.The information contained herein does not purport to be comprehensive or final as the apparatus is subject to being altered and/or superceded. Recipients should not rely on this information. Any liabilities are hereby expressly disclaimed.

e. The information contained herein has been provided by the NTA but does not purport to be comprehensive or final. Recipients should not rely on the information. Neither the NTA nor any of its directors, officers, employees, agents, stakeholders or advisers make any representation or warranty as to, or accept any liability or responsibility in relation to, the adequacy, accuracy, reasonableness or completeness of the information provided as part of this document or any matter on which the information is based (including but not limited to loss or damage arising as a result of reliance by recipients on the information or any part of it). Any liabilities are hereby expressly disclaimed.

Project Ireland 2040
Building Ireland's Future

Rev	Date	Drn	Chk'd	App'd	Description
L04	21/01/22	DH	AD	CA	ISSUE FOR PHASE 3: PRELIMINARY DESIGN
L03	25/06/21	SH	CA	JS	ISSUED FOR APPROVAL
L02	22/04/21	DH	NR	JS	ISSUED FOR PEER REVIEW
L01	09/12/20	DH	AD	JS	STAGE B1 - PEER REVIEW

W.I.P.

Client: NTA Údarás Náisiúnta Iompair National Transport Authority

Engineering Designer: AECOM / MOTT MACDONALD

Programme Title: **BUSCONNECTS DUBLIN CORE BUS CORRIDORS INFRASTRUCTURE WORKS**

Drawing Title: LUCAN TO CITY CENTRE CORE BUS CORRIDOR SCHEME RW01.06 HERMITAGE GOLF CLUB RETAINING WALL GENERAL ARRANGEMENT

Date	Scale	Drawn	Checked	Approved
21/01/22	AS SHOWN @ A1 AS SHOWN @ A3	D.HAMILTON	A.T.DALE	C.ACTON

Project Code	Originator Code	QMS Code	Drawing File Name	Sheet Number	Status	Rev
BCIDA	ACM		BCIDA-ACM-STR_GA-0006_RW_01-DR-CB-0101	1 of 1	A	L04

C:\users\costelloa\appdata\local\projectwise\workdir\mott-gb-pw-03\d0242614\BCIDA-ACM-STR_GA-0006_RW_01-DR-CB-0101.dwg

Appendix C Utility Drawings

LEGEND:

- EXISTING KERB LINE
- EXISTING HV ELECTRICITY (UNDERGROUND)
- EXISTING HV ELECTRICITY (OVERHEAD)
- EXISTING MV ELECTRICITY (UNDERGROUND)
- EXISTING MV ELECTRICITY (OVERHEAD)
- EXISTING LV ELECTRICITY (UNDERGROUND)
- EXISTING LV ELECTRICITY (OVERHEAD)
- EXISTING LP GAS NETWORK
- EXISTING MP GAS NETWORK
- EXISTING HP GAS NETWORK
- EXISTING STORM WATER DRAINAGE
- EXISTING FOUL WATER DRAINAGE

NOTE: UTILITY LOCATIONS ARE INDICATIVE ONLY AND BASED ON UTILITY PROVIDER RECORDS

- PROPOSED KERB LINE
- EXISTING COMBINED DRAINAGE NETWORK
- EXISTING WATER NETWORK
- EXISTING VIRGIN MEDIA NETWORK
- EXISTING ESB DUBLIN DARK FIBRE
- EXISTING TELCO DUCT
- EXISTING ENET NETWORK
- EXISTING EIR NETWORK
- EXSTING FIBRE DUBLIN CITY COUNCIL NETWORK
- SITE BOUNDARY LINE
- TEMPORARY LAND ACQUISITION

0 5.0 10.0 20.0 30.0 40.0 50.0m

SCALE 1:500 @ A1; 1:1000 @ A3

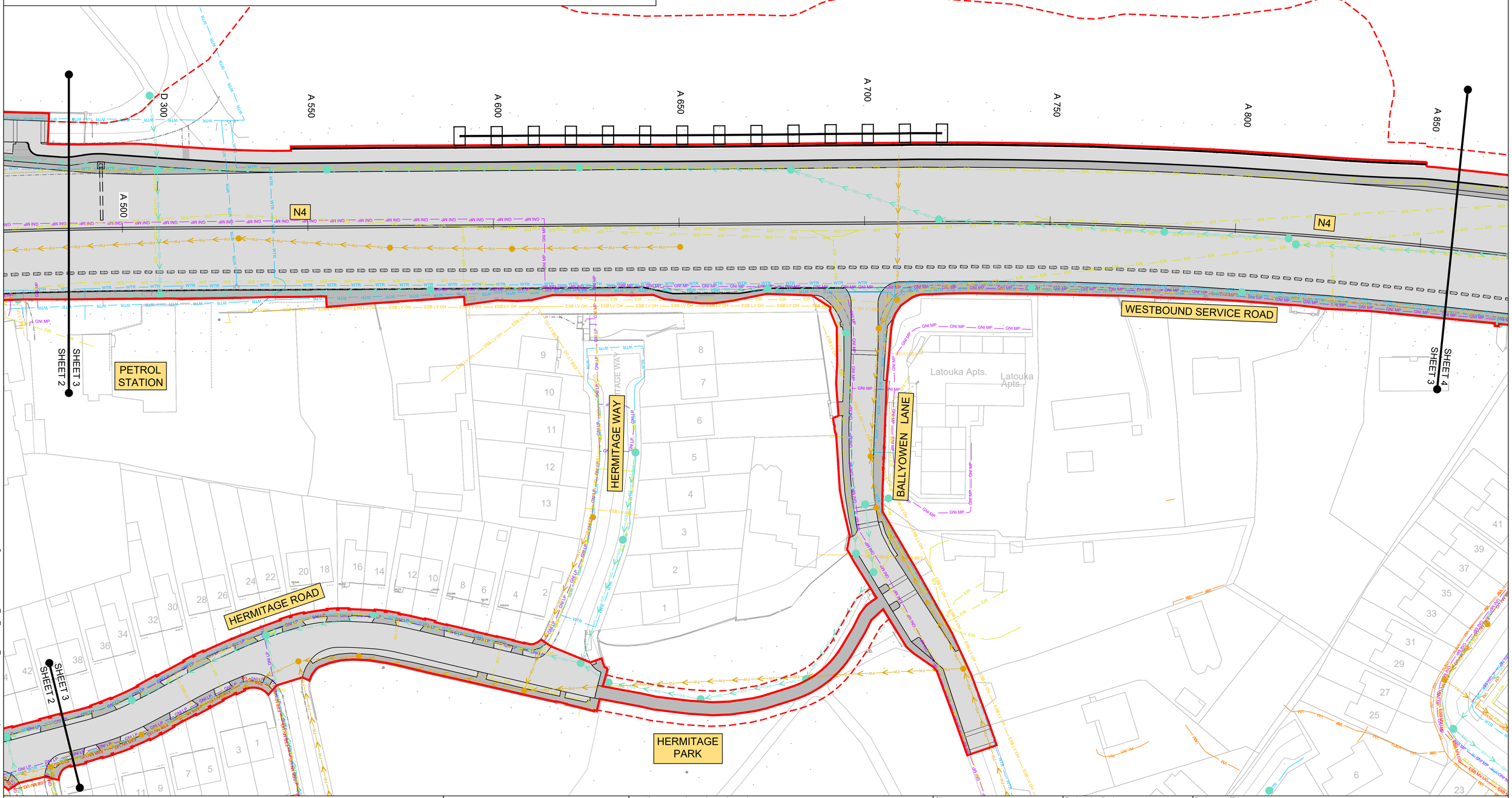

Disclaimer

a. © National Transport Authority (NTA) 2022. This drawing is confidential and the copyright in it is owned by NTA. This drawing must not be either loaned, copied or otherwise reproduced in whole or in part or used for any purpose without the prior permission of NTA.

b. This drawing is to be used for the design element identified in the titlebox. Other information shown is to be considered indicative only. The drawing is to be read in conjunction with all other relevant design drawings.

c. O.S. data used for plans are printed under © Ordnance Survey Ireland Government of Ireland. All rights reserved. Licence Number 2022/OSi_NMA_180 National Transport Authority. All elevations are in metres and relate to OSi Geoid Model (OSGM15) Malin Head. All Co-ordinates are in Irish Transverse Mercator Grid (ITM) as defined by OSi active local GPS station.

d. Information concerning the position of apparatus shown on this drawing is based on drawings supplied by the utility owners and/or the utility works contractor, whilst every care has been taken in the preparation of this drawing, positions should be taken as approximate and are intended for general guidance only and no representation is made by the NTA as to the accuracy, completeness, sufficiency or otherwise of this drawing and the position of the apparatus.The information contained herein does not purport to be comprehensive or final as the apparatus is subject to being altered and/or superceded. Recipients should not rely on this information. Any liabilities are hereby expressly disclaimed.

e. The information contained herein has been provided by the NTA but does not purport to be comprehensive or final. Recipients should not rely on the information. Neither the NTA nor any of its directors, officers, employees, agents, stakeholders or advisers make any representation or warranty as to, or accept any liability or responsibility in relation to, the adequacy, accuracy, reasonableness or completeness of the information provided as part of this document or any matter on which the information is based (including but not limited to loss or damage arising as a result of reliance by recipients on the information or any part of it). Any liabilities are hereby expressly disclaimed.

Project Ireland 2040
Building Ireland's Future

Rev	Date	Drn	Chk'd	App'd	Description
L04	11/02/22	PP	AD	CA	ISSUE FOR PHASE 3: PRELIMINARY DESIGN
L03	30/06/21	PZ	NS	JS	ISSUE FOR APPROVAL
L02	22/04/21	PZ	AD	JS	ISSUED FOR PEER REVIEW
L01	23/10/20	PZ	AD	JS	STAGE A - PEER REVIEW

W.I.P.

Client: NTA Údarás Náisiúnta Iompair National Transport Authority

Engineering Designer: AECOM / MOTT MACDONALD

Programme Title: **BUSCONNECTS DUBLIN CORE BUS CORRIDORS INFRASTRUCTURE WORKS**

Drawing Title: LUCAN TO CITY CENTRE CORE BUS CORRIDOR SCHEME COMBINED EXISTING UTILITY RECORDS

Date	Scale	Drawn	Checked	Approved
11/02/22	1:500 @ A1 1:1000 @ A3	P.POCZATKO	A.T.DALE	C.ACTON

Project Code	Originator Code	QMS Code	Drawing File Name	Sheet Number	Status	Rev
BCIDA	ACM		BCIDA-ACM-UTL_UC-0006_XX_00-DR-CU-0003	03 of 31	A	L04

DO NOT SCALE USE FIGURED DIMENSIONS ONLY

C:\Users\MAR95838\OneDrive - Mott MacDonald\Desktop\PDF\BCIDA-ACM-UTL_UC-0006_XX_00-DR-CU-0003.dwg

Appendix D Designers Risk Assessment

BUSCONNECTS – Lucan to City Centre Route 0006
CBC006-RW01 Hermitage Golf Club Retaining Wall
Designers Risk Assessment

AECOM

Project Number:	60599126	**Revision**							
Client:	National Transport Authority	**Rev**	01	02	03	04	05	06	07
Designer:	AECOM	**Date**	05/03/21						
Contractor:	Not applicable	**Client**	✓						
Prepared by:	Rionach Murphy	**Designer**	✓						
Checked by:	Arthur Costello	**Main Contractor**	-						
Approved by:	Niamh Rodgers	**Sub-Contractors**	-						
		Other	-						

Ref.	Feature, element, process or work activity	Constraints and significant hazards identified	Risk Rating before Intervention	Designers interventions to eliminate or reduce hazards	Significant residual hazards remaining	Residual Risk Rating	Information to be provided to enable project partners to manage hazards
1	Live National Primary Road	Site is immediately adjacent to the N4. The road will be live during majority of construction.	High	Traffic management to be implemented to ensure that safe working strips are provided to work areas.	Live traffic with traffic management zones	Medium	Traffic Management controls to be implemented on site during construction works. Contractor is to ensure that appropriate PPE is worn at all times and that all staff are aware of the risks of working near a live road.
2	Access and egress to the site area	Access and egress to the central supports is via the N4.	High	Traffic management to be implemented to ensure that safe access and egress is achieved		Low	The contractor is to ensure that suitable traffic management is implemented on site which includes appropriately designed and identified access points for site vehicles.
3	Site security	Unauthorised access by members of the public to the works areas	High	Suitable hoarding/fencing to be erected to prevent unauthorised access to the works areas		Low	Contractor to ensure that fencing is erected and maintained throughout the construction works.
4	Piling	Piling operations to be undertaken in close proximity to a live road	High	Appropriately designed working areas for piling plant to be provided during construction.		Medium	Contractor to ensure appropriate piling methodology and construction sequences are in place. All proposed piling operations to be agreed with Project Manager and the DSR

Ref.	Feature, element, process or work activity	Constraints and significant hazards identified	Risk Rating before Intervention	Designers interventions to eliminate or reduce hazards	Significant residual hazards remaining	Residual Risk Rating	Information to be provided to enable project partners to manage hazards
5	Underground services	Potential for unknown and/or undocumented services in the vicinity of the proposed structure.	Medium	Desk top study of available utility information carried out and all known services in the vicinity of the proposed structure have been shown on detailed design drawings.		Low	Full CAT scan site survey to be carried out prior to construction commencing. Any services identified should be located by hand excavation, marked and protected or re-routed before commencement of works
6	Substances hazardous to health	Risk of chemical exposure from construction materials such as waterproofing and silane	High	Project Specific Specifications have been prepared to identify a number of likely substances to be used in the construction which are hazardous to health		Medium	Contractor to refer to project specification for further information. All substances to be applied in line with manufacturers recommendations
7	Slope/ground stability	Risk of embankment failure during construction	High	Embankments have been designed to ensure stability during temporary construction stages as well as the final construction. The depth of embankments has been limited where possible to reduce the risk of collapse.		Low	Stability of constructed embankments to be checked on a regular basis, surcharging with heavy plant to be avoided on embankments, if movement of heavy plant on embankments is required the embankment should be monitored.
8	Excavation and piling adjacent to a live road	Excavations and piling required to construct the wall run the risk of undermining and vibrating the foundations of the live road adjacent to the Wall	High				The contractor is to be aware of the risk of undermining the existing N4 road foundations. The contractor is to ensure that vibration levels from excavation and piling are limited and that safe working limits are developed prior to works.
9	Manual handling	Injury to staff, possible back injury and/or crushing toes, caused by manual handling, lifting tools and equipment, moving materials, and/or hand digging.	High	Consideration of method of construction has been made during detailed design. Elements have been sized such that they can be easily fabricated and transported.		Low	Contractor to develop method statements and ensure manual handling training is undertaken prior to manual handling activities. Only trained personnel to use tools. Only use the appropriate tool for each activity. Specialised equipment or mechanical hoist equipment to be used where appropriate.
10	Power tools	Risk of clothing becoming entangled in moving parts; possibility of eye injuries from dust or other airborne fragments, when using power tools. Also, risk of wrist and/or hand injuries,	High	Consideration has been made during the design to reduce the requirements for power tools.		Low	The contractor is to ensure safe systems of work are in place and followed at all times. Protective PPE including eye protection and safety footwear (laced) provided and all staff must have received

Ref.	Feature, element, process or work activity	Constraints and significant hazards identified	Risk Rating before Intervention	Designers interventions to eliminate or reduce hazards	Significant residual hazards remaining	Residual Risk Rating	Information to be provided to enable project partners to manage hazards
		due to power tools jamming or binding. Hand/Arm Vibration Syndrome (HAVS) from over use of power tools					manual handling training. Inspect all tools before use for damage/wear, do not use if damaged. Hydraulic tools to be used in accordance with manufacturer's procedures and safety procedures and serviced to the manufacturer's specification
11	Night-time Working	Reduced visibility and fatigue caused by night time working poses the risk of slips, trips, falls and unsafe working practices being incorporated.	High	Site personnel should receive the required safety induction training. Appropriate signage should be erected to make site personnel aware of the potential hazards across the site.		Low	The contractor must ensure that all site personnel wear the required PPE at all times when on site. It is also the contractor's responsibility to ensure site personnel are not overworked and remain vigilant.
12	Demolition of structures	Demolition of existing retaining wall	High	Detailed demolition plan to be prepared prior to demolition. Lane closures and traffic management to be implemented during demolition.		Medium	Contractor is to develop a detailed method statement and risk assessment for all demolition works. Safe working limits are to be established and any damages that occur to the existing N4 road must be repaired.